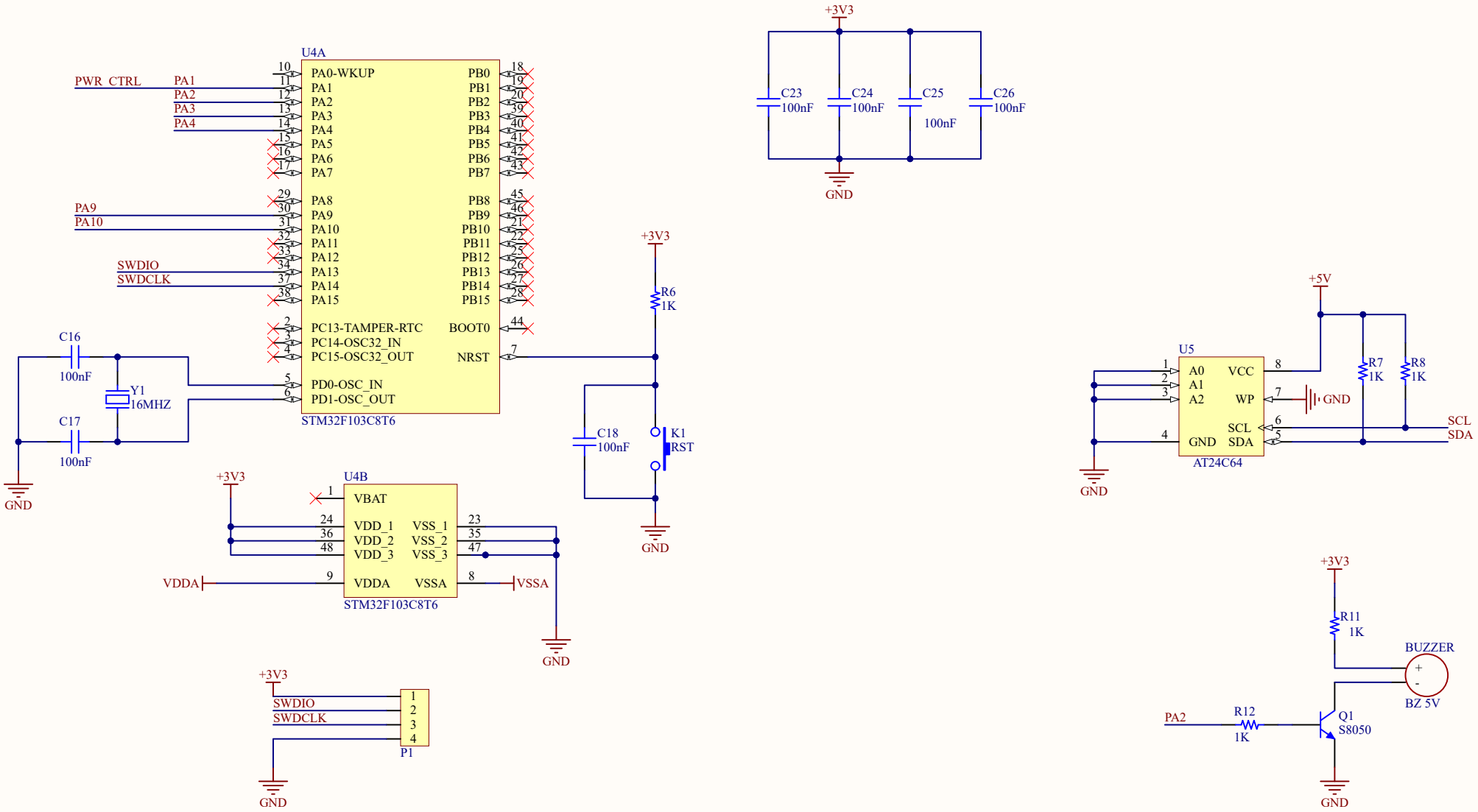

Title		
CAR GPS V2.0 [MCU]		
Size: A4	Number: H.REZAEI	Revision: 2.0
Date: 10/03/1404		Sheet of
File: C:\IMPORTANT-1\..\MCU.SchDoc		Drawn By: